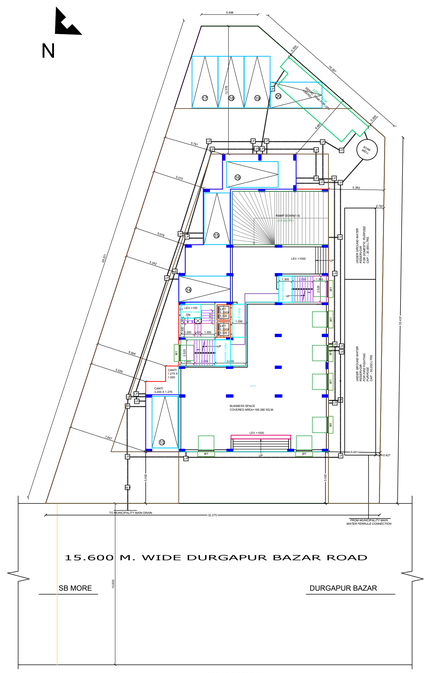

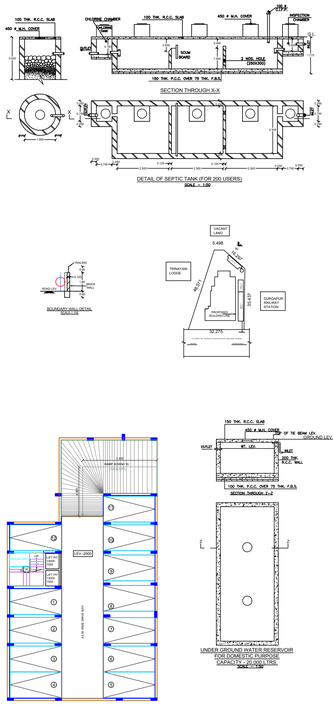

DOORS & WINDOWS SCHEDULE

DOOR MARK	WIDTH	HEIGHT	WINDOWS MARK	WIDTH	HEIGHT
D1	1.000	2.100	W1	1.500	1.200
D2	0.900	2.100	W2	1.200	1.200
D3	0.750	2.100	W3	1.125	1.200
D4	2.200	2.100	W4	1.800	1.200
D5=	1.800	2.100	W5	0.600	0.150
			W	2.100	1.200

SPECIFICATION

1. FOR SPECIFICATIONS OF MATERIALS & WORKMANSHIP FOLLOW N.B.C. 1983.
2. BRICK WORK SHALL BE OF FIRST CLASS BRICK IN CEMENT MORTAR 1:6 (1 CEMENT : 6 SAND).
3. GRADE OF CON. IS M 15, IN-B & STEEL IS Fe415.
4. D.P.C. WITH PLAIN CEMENT CONC. (1:2:4) WITH WATER PROOFING COMPOUND.
5. TERRACE WITH LIME CONC. OF RATIO (2:3:7).

NOTES:
1. ALL DIMENSIONS ARE IN m.m. OTHERWISE MENTIONED.
2. ALL EXTERNAL WALLS ARE 200TH. PARTITION WALLS ARE 125TH. & INTERNAL WALLS ARE 125TH.
3. THE TOP OF SEPTIC TANK, INSPECTION & SEPTIC TANK SHALL NOT EXCEED THE DEPTH OF THE NEAREST COLUMN FOUNDATION OF THE BUILDING.

AREA STATEMENT:
1 TOTAL COV. AREA
1 PER. COV. AREA =(TOTAL=10.50 FT + 1500.07 SQ.M
2 PER. OR COV. AREA =(4FT)+ 458.928 SQ.M
3 PER. F.A.R. = 2.5 (2730.175 SQ.M.)
4 PROPOSED OR COV. = 401.06 SQ.M.

1 TOTAL COV. AREA
1 TOTAL = 1510.57 SQ.M
1 GR. FL. AREA = 300.07 =(Area=3.5(W)) =1051.01 SQ.M
1 1ST FL. AREA =401.06 - 13.5 (W) = 1024.01 = 958.49 SQ.M
1 2ND FL. AREA =401.06 - 13.5 (W) = 1024.01 = 958.49 SQ.M
1 3RD FL. AREA =401.06 - 13.5 (W) = 1024.01 = 958.49 SQ.M
1 4TH FL. AREA =401.06 - 13.5 (W) -28.08(Area)= 1024.01 = 957.57 SQ.M
1 5TH FL. AREA =401.06 - 13.5 (W) -28.08(Area)= 1024.01 = 957.57 SQ.M
1 6TH FL. AREA =401.06 - 13.5 (W) -28.08(Area)= 1024.01 = 957.57 SQ.M
1 7TH FL. AREA =401.06 - 13.5 (W) -28.08(Area)= 1024.01 = 957.57 SQ.M
= 10944.270 SQ.M.

1 TOTAL EXISTED AREA = 194.69 SQ.M
1 SIZE OF PLOT = 34.00X
1 SIZE OF TENAMENTS
1 = 100 SQM TO 150 SQM = 18 NOS
2 = 151 SQM TO 175 SQM = 18 NOS
3 = 176 SQM TO 200 SQM = 18 NOS
1 REQUIRED NO OF CAR PARKING = 17 NOS
1 PROVIDED NO OF CAR PARKING = 17 NOS
1 REQUIRED AREA OF CAR PARKING = 480 SQ.M.
1 PROVIDED AREA OF CAR PARKING = 480 SQ.M.
1 PERMISSIBLE F.A.R. = 2.5
1 PROPOSED F.A.R. = (10944.69+194.69+480.00)/ 765 = 16/ 0.71 = 2.40

1. CERTIFIED THAT THE FOUNDATION & SUPER STRUCTURE OF THE BUILDING HAVE BEEN NO DEGRADED BY ME OR US TO BE SAFE IN ALL RESPECTS INCLUDING THE CONSIDERATION OF BEARING CAPACITY OF THE SOIL AT SITE.
2. THE STRUCTURAL DESIGN & DRAWING OF BOTH FOUNDATION & SUPER STRUCTURE OF THE BUILDING HAVE BEEN MADE BY ME UNDER MY DIRECT SUPERVISION & I AM ABLE TO CERTIFY THAT THE SAME ARE FOR THE LATEST EDITION OF THE N.B.C. OF INDIA & CERTIFIED THAT IT IS SAFE & STABLE IN ALL RESPECT.

SUSANTA SAHA
27-17-08
"NAME OF STRUC. ENGG."

SUSANTA SAHA
27-17-08
"NAME OF GEO-TECHNICAL ENGG."

RANJIT BHATTACHARYA
REG. NO. CA/87/10587
"NAME OF ARCHITECT"

BISHNU NARAYAN MONDAL
"NAME OF OWNER"

PROPOSED PLAN OF BASEMENT+ G + VII STORIED RESIDENTIAL CUM COMMERCIAL BUILDING OF BISHNU NARAYAN MONDAL AT MOUZA - UCHPATHUR, WARD NO.-01, H.NO. 85, S.A.KHATIAN NO.- 3/351, L.R. NO. 1414, L.R.DAG NO.- 3/351, P.S.-DURGAPUR, UNDER DURGAPUR MUNICIPAL CORPORATION, P.S. - CONE OVERL DIST.- PASCHIM BURDWAN.

BHATTACHARYA & ASSOCIATES
ARCHITECT & ENGINEERS & AT ACCIDENT & CONSULTANT & VALUER & LOAN ADVISOR
1ST FLOOR, DURGA TOWER, DURGAPUR
M. + 8436787222
E-mail: ar.ranjitbhattacharya@gmail.com

SERIAL-LAB
SUBMISSION BUILDING

DOORS & WINDOWS SCHEDULE

DOOR MARK	WIDTH	HEIGHT	WINDOWS MARK	WIDTH	HEIGHT
D1	1.000	2.100	W1	1.500	1.200
D2	0.900	2.100	W2	1.200	1.200
D3	0.750	2.100	W3	1.125	1.200
D4	2.200	2.100	W4	1.800	1.200
D5=	1.800	2.100	W5	0.600	0.150
			W	2.100	1.200

SPECIFICATION

1. FOR SPECIFICATIONS OF MATERIALS & WORKMANSHIP FOLLOW N.B.C. 1983.
2. BRICK WORK SHALL BE OF FIRST CLASS BRICK IN CEMENT MORTAR 1:6 (1 CEMENT : 6 SAND).
3. GRADE OF CON. IS M 15, IN-B & STEEL IS Fe415.
4. D.P.C. WITH PLAIN CEMENT CONC. (1:2:4) WITH WATER PROOFING COMPOUND.
5. TERRACE WITH LIME CONC. OF RATIO (2:3:7).

NOTES:
1. ALL DIMENSIONS ARE IN m.m. OTHERWISE MENTIONED.
2. ALL EXTERNAL WALLS ARE 200TH. PARTITION WALLS ARE 125TH. & INTERNAL WALLS ARE 125TH.
3. THE TOP OF SEPTIC TANK, INSPECTION & SEPTIC TANK SHALL NOT EXCEED THE DEPTH OF THE NEAREST COLUMN FOUNDATION OF THE BUILDING.

AREA STATEMENT:
1 TOTAL COV. AREA
1 PER. COV. AREA =(TOTAL=10.50 FT + 1500.07 SQ.M
2 PER. OR COV. AREA =(4FT)+ 458.928 SQ.M
3 PER. F.A.R. = 2.5 (2730.175 SQ.M.)
4 PROPOSED OR COV. = 401.06 SQ.M.

1 TOTAL COV. AREA
1 TOTAL = 1510.57 SQ.M
1 GR. FL. AREA = 300.07 =(Area=3.5(W)) =1051.01 SQ.M
1 1ST FL. AREA =401.06 - 13.5 (W) = 1024.01 = 958.49 SQ.M
1 2ND FL. AREA =401.06 - 13.5 (W) = 1024.01 = 958.49 SQ.M
1 3RD FL. AREA =401.06 - 13.5 (W) = 1024.01 = 958.49 SQ.M
1 4TH FL. AREA =401.06 - 13.5 (W) -28.08(Area)= 1024.01 = 957.57 SQ.M
1 5TH FL. AREA =401.06 - 13.5 (W) -28.08(Area)= 1024.01 = 957.57 SQ.M
1 6TH FL. AREA =401.06 - 13.5 (W) -28.08(Area)= 1024.01 = 957.57 SQ.M
1 7TH FL. AREA =401.06 - 13.5 (W) -28.08(Area)= 1024.01 = 957.57 SQ.M
= 10944.270 SQ.M.

1 TOTAL EXISTED AREA = 194.69 SQ.M
1 SIZE OF PLOT = 34.00X
1 SIZE OF TENAMENTS
1 = 100 SQM TO 150 SQM = 18 NOS
2 = 151 SQM TO 175 SQM = 18 NOS
3 = 176 SQM TO 200 SQM = 18 NOS
1 REQUIRED NO OF CAR PARKING = 17 NOS
1 PROVIDED NO OF CAR PARKING = 17 NOS
1 REQUIRED AREA OF CAR PARKING = 480 SQ.M.
1 PROVIDED AREA OF CAR PARKING = 480 SQ.M.
1 PERMISSIBLE F.A.R. = 2.5
1 PROPOSED F.A.R. = (10944.69+194.69+480.00)/ 765 = 16/ 0.71 = 2.40

1. CERTIFIED THAT THE FOUNDATION & SUPER STRUCTURE OF THE BUILDING HAVE BEEN NO DEGRADED BY ME OR US TO BE SAFE IN ALL RESPECTS INCLUDING THE CONSIDERATION OF BEARING CAPACITY OF THE SOIL AT SITE.
2. THE STRUCTURAL DESIGN & DRAWING OF BOTH FOUNDATION & SUPER STRUCTURE OF THE BUILDING HAVE BEEN MADE BY ME UNDER MY DIRECT SUPERVISION & I AM ABLE TO CERTIFY THAT THE SAME ARE FOR THE LATEST EDITION OF THE N.B.C. OF INDIA & CERTIFIED THAT IT IS SAFE & STABLE IN ALL RESPECT.

SUSANTA SAHA
27-17-08
"NAME OF STRUC. ENGG."

SUSANTA SAHA
27-17-08
"NAME OF GEO-TECHNICAL ENGG."

RANJIT BHATTACHARYA
REG. NO. CA/87/10587
"NAME OF ARCHITECT"

BISHNU NARAYAN MONDAL
"NAME OF OWNER"

PROPOSED PLAN OF BASEMENT+ G + VII STORIED RESIDENTIAL CUM COMMERCIAL BUILDING OF BISHNU NARAYAN MONDAL AT MOUZA - UCHPATHUR, WARD NO.-01, H.NO. 85, S.A.KHATIAN NO.- 3/351, L.R. NO. 1414, L.R.DAG NO.- 3/351, P.S.-DURGAPUR, UNDER DURGAPUR MUNICIPAL CORPORATION, P.S. - CONE OVERL DIST.- PASCHIM BURDWAN.

BHATTACHARYA & ASSOCIATES
ARCHITECT & ENGINEERS & AT ACCIDENT & CONSULTANT & VALUER & LOAN ADVISOR
1ST FLOOR, DURGA TOWER, DURGAPUR
M. + 8436787222
E-mail: ar.ranjitbhattacharya@gmail.com

SERIAL-LAB
SUBMISSION BUILDING

Signature Not Verified
Digitally signed by
Name: Mr. Bibhas Hatu
Date: 02 Mar 2023
Time: 15:43:12
Reason: Building Permit
Location: Durgapur